Experiment No. 2

Familiarization with NAND, NOR, XOR and XNOR Gates

Objective:

- To understand the principales and operation of NAND, NOR, XOR and XNOR gates used in digital systems.
- To implement, test, and verify NAND, NOR, XOR, and XNOR logic gate circuits using a standard digital trainer kit.

Basic Theory:

NAND Gate:

It is a fundamental digital logic gate that outputs the inverse of an AND gate.

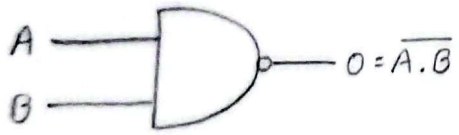

A	B	Output = $\overline{A.B}$
0	0	1
0	1	1
1	0	1
1	1	0

NOR Gate:

It is a fundamental digital logic gate that outputs the inverse of an OR gate.

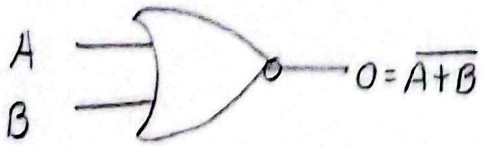

A	B	$\overline{A+B}$
0	0	1
0	1	0
1	0	0
1	1	0

XOR Gate:

It is a digital gate that outputs true (1) if an odd number of its input are true, and false (0) if an even number are true.

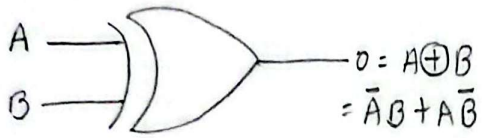

A	B	$A \oplus B$
0	0	0
0	1	1
1	0	1
1	1	0

XNOR Gate:

It is a logic gate where the output goes High (or "1") only if both its input are equal.

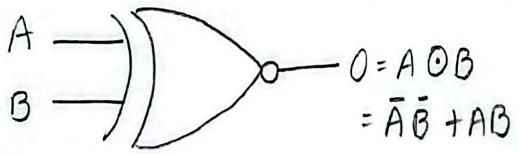

A	B	$A \odot B$
0	0	1
0	1	0
1	0	0
1	1	1

Diagrams and Observations:

Objective No. 1 → Investigate the relationship between inputs and outputs of NAND gate

Truth Table

A	B	Exp. Output	Obs. Output
0	0	1	1
0	1	1	1
1	0	1	1
1	1	0	0

Expected and Observed Output are the same.

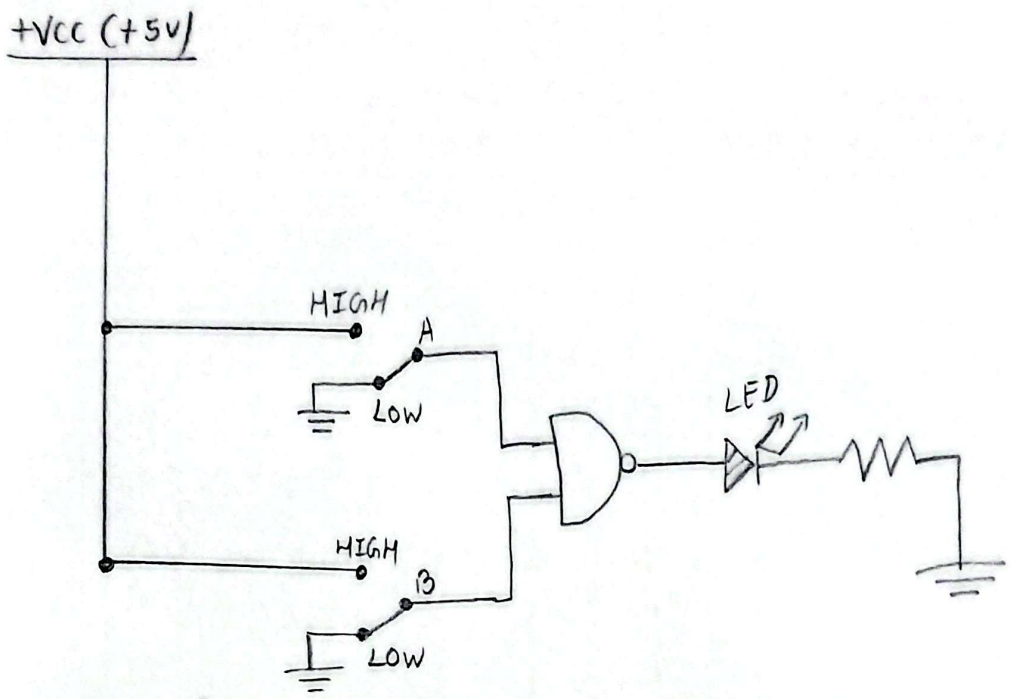

fig. 2 INPUT Circuit of NAND Gate

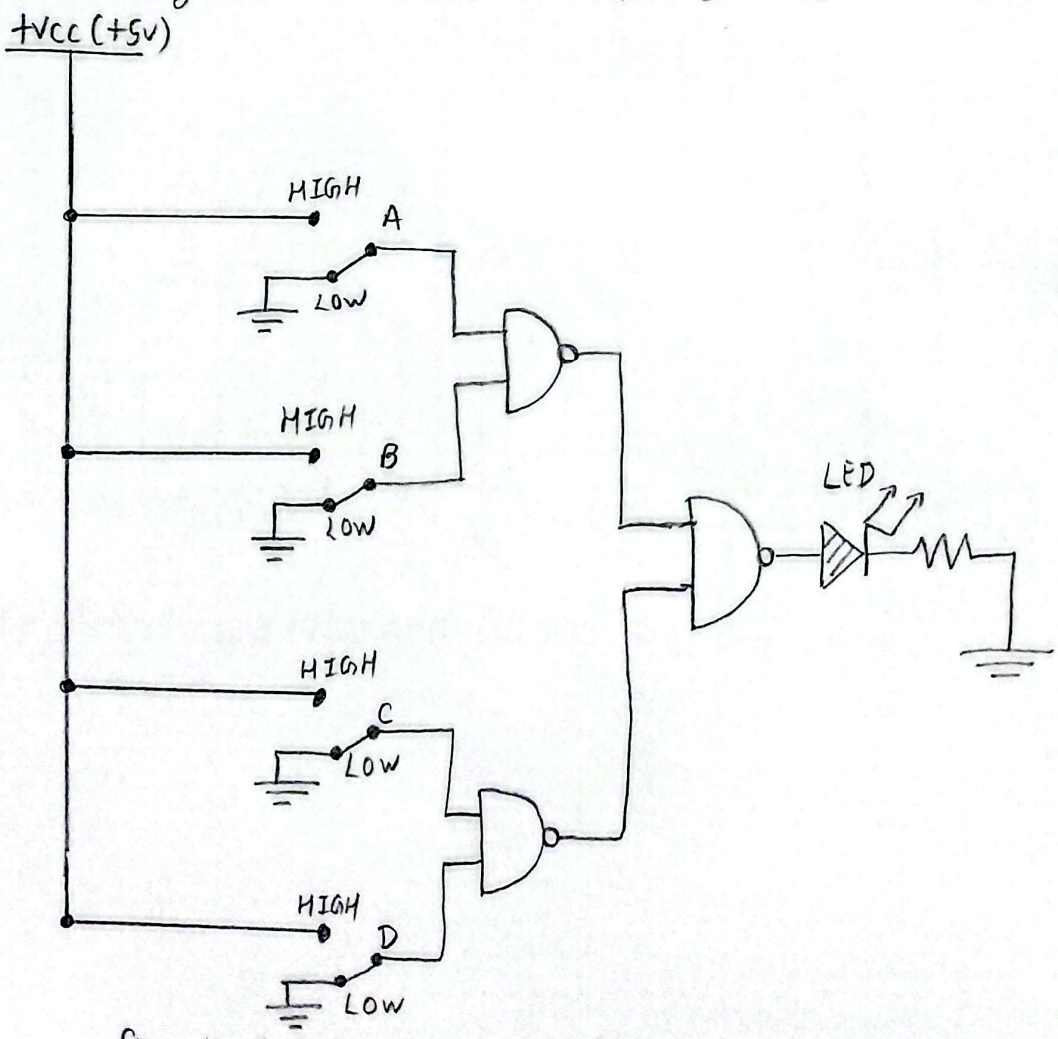

fig. 4 INPUT NAND form, three 2 INPUT NAND Circuit

Objective No. 2 → Building a 4 input NAND from 3 two input NAND Gate

INPUTS				Expected Output						Observed Output		
A	B	C	D	AB	$\overline{AB}$	CD	$\overline{CD}$	$\overline{AB}.\overline{CD}$	$\overline{\overline{AB}.\overline{CD}}$	$\overline{AB}$	$\overline{CD}$	$\overline{\overline{AB}.\overline{CD}}$
0	0	0	0	0	1	0	1	1	0	1	1	0
0	0	0	1	0	1	0	1	1	0	1	1	0
0	0	1	0	0	1	0	1	1	0	1	1	0
0	0	1	1	0	1	1	0	0	1	1	0	1
0	1	0	0	0	1	0	1	1	0	1	1	0
0	1	0	1	0	1	0	1	1	0	1	1	0
0	1	1	0	0	1	0	1	1	0	1	1	0
0	1	1	1	0	1	1	0	0	1	1	0	1
1	0	0	0	0	1	0	1	1	0	1	1	0
1	0	0	1	0	1	0	1	1	0	1	1	0
1	0	1	0	0	1	0	1	1	0	1	1	0
1	0	1	1	0	1	1	0	0	1	1	0	1
1	1	0	0	1	0	0	1	0	1	0	0	1
1	1	0	1	1	0	0	1	0	1	0	0	1
1	1	1	0	1	0	0	1	0	1	0	0	1
1	1	1	1	1	0	1	0	0	1	0	0	1

Expected Output and Observed Output are the same.

Objective No. 3 → Investigate the relationship between inputs and outputs of NOR gate

Truth Table:

A	B	Exp. Output	Obs. Output
0	0	1	1
0	1	0	0
1	0	0	0
1	1	0	0

Expected Output and Observed Output are the same.

Objective No. 4 → Building a 4 input NOR form three 2 input NOR gates.

INPUT				Expected Output						Observed Output		
A	B	C	D	$A+B$	$C+D$	$\overline{A+B}$	$\overline{C+D}$	$\overline{(A+B)}+\overline{(C+D)}$	$\overline{\overline{(A+B)}+\overline{(C+D)}}$	$\overline{A+B}$	$\overline{C+D}$	$\overline{\overline{(A+B)}+\overline{(C+D)}}$
0	0	0	0	0	0	1	1	1	0	1	1	0
0	0	0	1	0	1	1	0	1	0	1	0	0
0	0	1	0	0	1	1	0	1	0	1	0	0
0	0	1	1	0	1	1	0	1	0	1	0	0
0	1	0	0	1	0	0	1	1	0	0	1	0
0	1	0	1	1	1	0	0	0	1	0	0	1
0	1	1	0	1	1	0	0	0	1	0	0	1
0	1	1	1	1	1	0	0	0	1	0	0	1
1	0	0	0	1	0	0	1	1	0	0	1	0
1	0	0	1	1	1	0	0	0	1	0	0	1
1	0	1	0	1	1	0	0	0	1	0	0	1
1	0	1	1	1	1	0	0	0	1	0	0	1
1	1	0	0	1	0	0	1	1	0	0	1	0
1	1	0	1	1	1	0	0	0	1	0	0	1
1	1	1	0	1	1	0	0	0	1	0	0	1
1	1	1	1	1	1	0	0	0	1	0	0	1

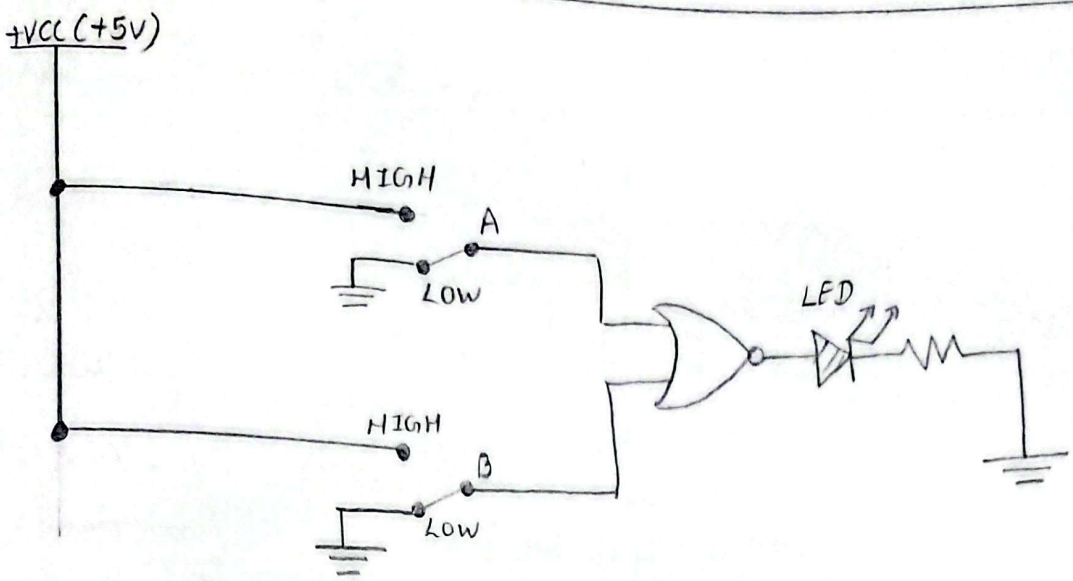

fig. 2 INPUT Circuit of NOR Gate

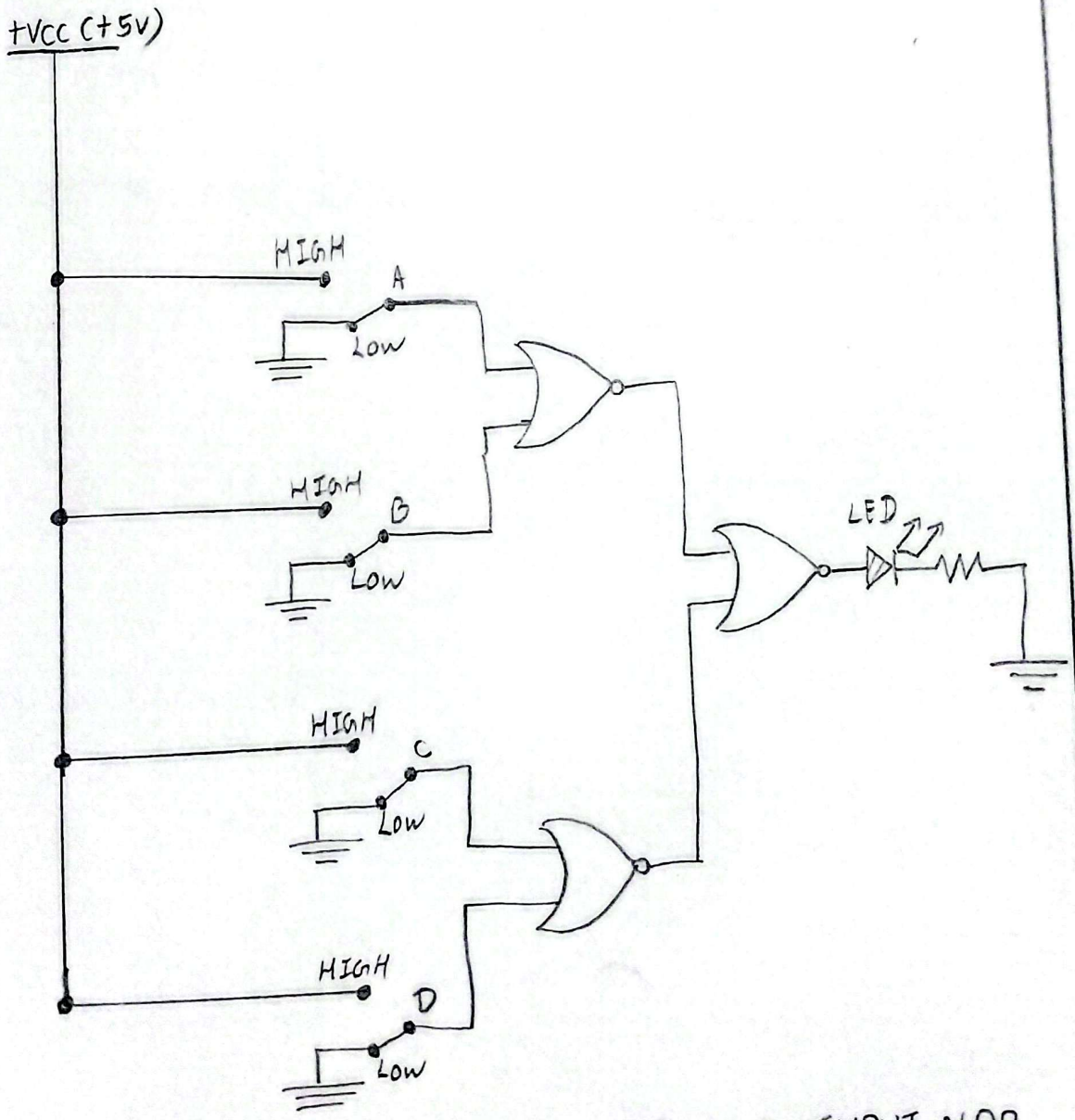

fig. 4 INPUT NOR form, Three 2 INPUT NOR Circuit

The Expected Output and Observed Output are the same.

Objective No. 5 → Investigate the relationship between inputs and outputs of XOR gate.

Truth Table

A	B	Exp. Output	Obs. Output
0	0	0	0
0	1	1	1
1	0	1	1
1	1	0	0

The Expected and Observed Output are the same.

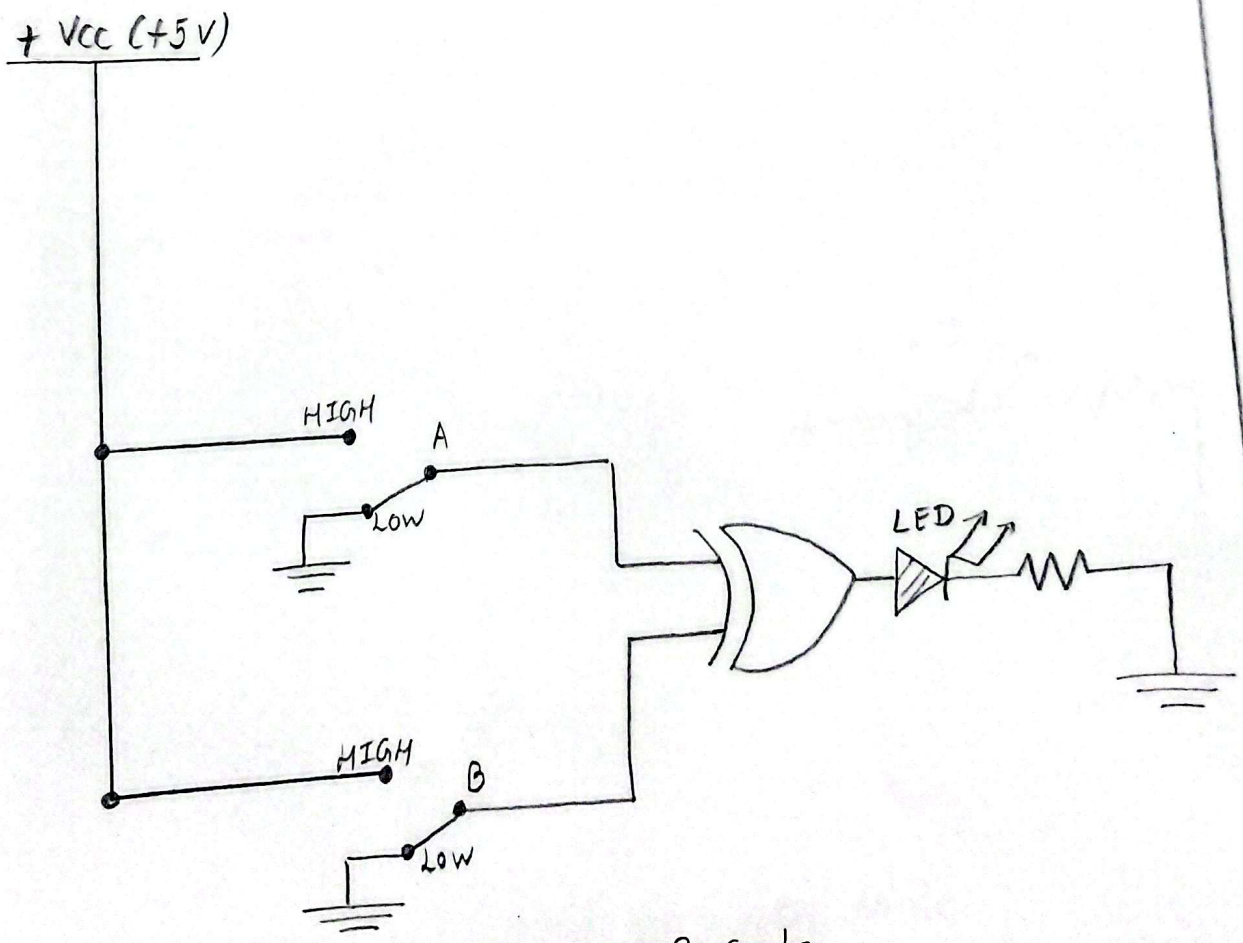

fig. 2 INPUT Circuit of XOR Gate

Objective No. 6 → Investigate the relationship between inputs and outputs of XNOR gate

Truth Table

A	B	Exp. Output	Obs. Output
0	0	1	1
0	1	0	0
1	0	0	0
1	1	1	1

The Expected output and Observed output are the same.

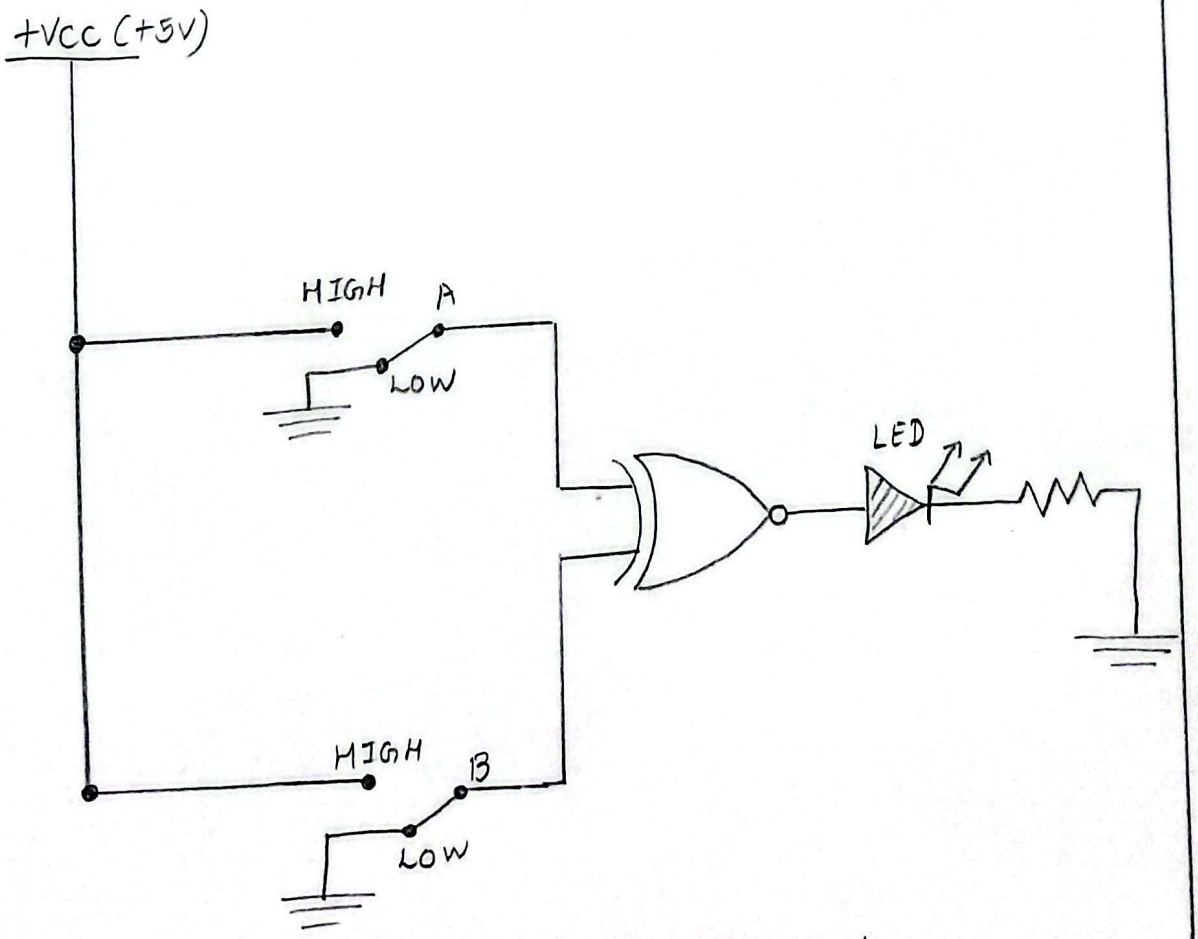

fig. 2 INPUT Circuit of XNOR Gate

Discussion and Conclusion:

In this lab, we learnt about the use of NAND, NOR, XOR and XNOR gates. We learnt that NAND gate inverse the output of AND gate and NOR gate inverse the output of OR gate. While XOR gate give low output if input is same and opposite is the case for XNOR.

In Conclusion, We have familiarized with NAND, NOR, XOR and XNOR gates.